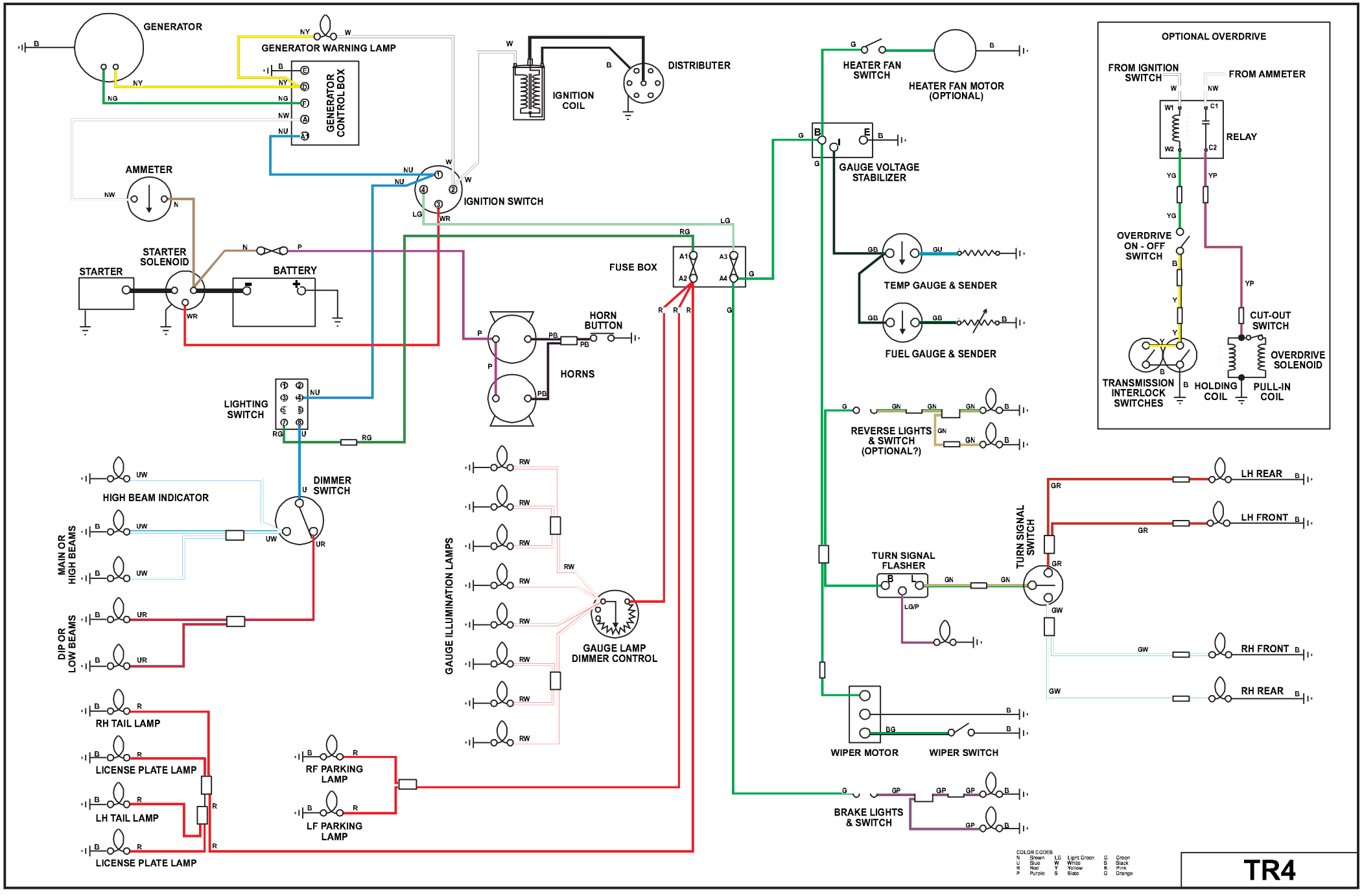
GENERATOR
GENERATOR WARNING LAMP
GENERATOR CONTROL BOX
IGNITION COIL
DISTRIBUTER
AMMETER
IGNITION SWITCH
STARTER SOLENOID
STARTER
BATTERY
FUSE BOX
HORN BUTTON
HORNS
LIGHTING SWITCH
DIMMER SWITCH
HIGH BEAM INDICATOR
MAIN OR HIGH BEAMS
DIP OR LOW BEAMS
GAUGE ILLUMINATION LAMPS
GAUGE LAMP DIMMER CONTROL
RH TAIL LAMP
LICENSE PLATE LAMP
LH TAIL LAMP
LICENSE PLATE LAMP
RF PARKING LAMP
LF PARKING LAMP
HEATER FAN SWITCH
HEATER FAN MOTOR (OPTIONAL)
GAUGE VOLTAGE STABILIZER
TEMP GAUGE & SENDER
FUEL GAUGE & SENDER
REVERSE LIGHTS & SWITCH (OPTIONAL?)
TURN SIGNAL FLASHER
TURN SIGNAL SWITCH
LH REAR
LH FRONT
RH FRONT
RH REAR
WIPER MOTOR
WIPER SWITCH
BRAKE LIGHTS & SWITCH
OPTIONAL OVERDRIVE
FROM IGNITION SWITCH
FROM AMMETER
RELAY
OVERDRIVE ON - OFF SWITCH
CUT-OUT SWITCH
OVERDRIVE SOLENOID
TRANSMISSION INTERLOCK SWITCHES
HOLDING COIL
PULL-IN COIL
COLOR CODES
N Brown
U Blue
R Red
P Purple
LG Light Green
W White
Y Yellow
S Slate
G Green
B Black
K Pink
O Orange
TR4